

Dimensioni ***Dimensions***

ZP 4... 4P ...

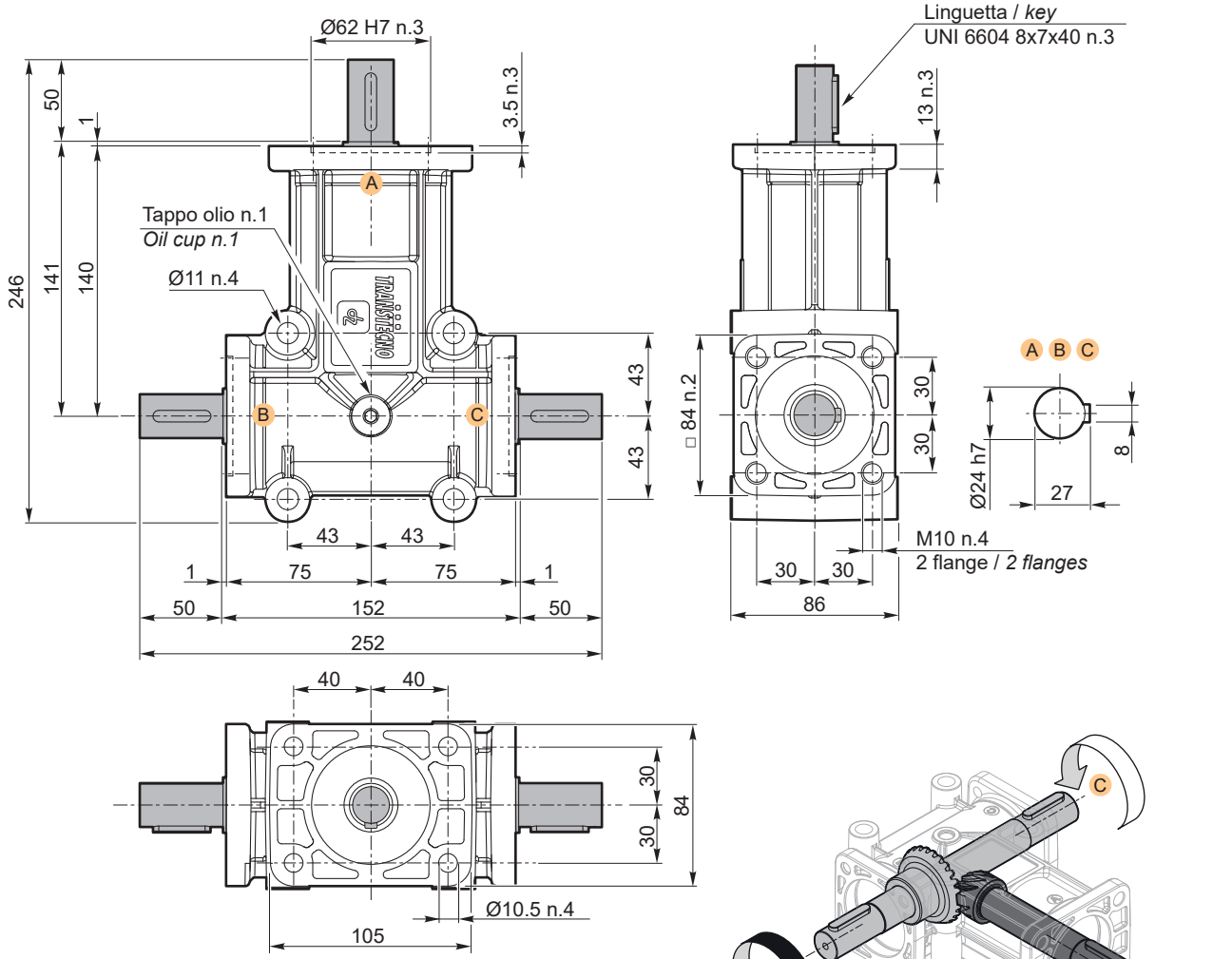

i	Code	Kg
1	ZP 41 4P ABC	4.5
2	ZP 43 4P ABC	
3	ZP 45 4P ABC	

Le sedi linguetta negli alberi cavi come negli alberi maschi possono assumere qualsiasi posizione angolare.

The keyway in hollow shafts as in solid shafts can assume any angular position.

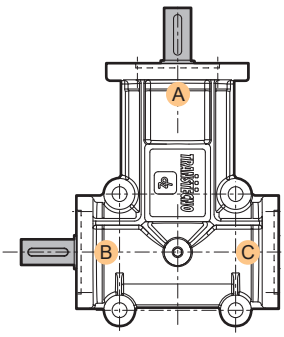

i	Code	Kg
1	ZP 40 S 4P AB	4.5
2	ZP 42 S 4P AB	
3	ZP 44 S 4P AB	

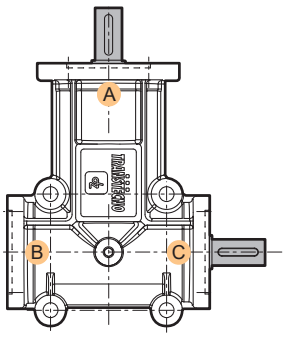

i	Code	Kg
1	ZP 40 FS 4P AC	4.5
2	ZP 42 FS 4P AC	
3	ZP 44 FS 4P AC	