

Dimensioni ***Dimensions***

ZP 2... 4P ...

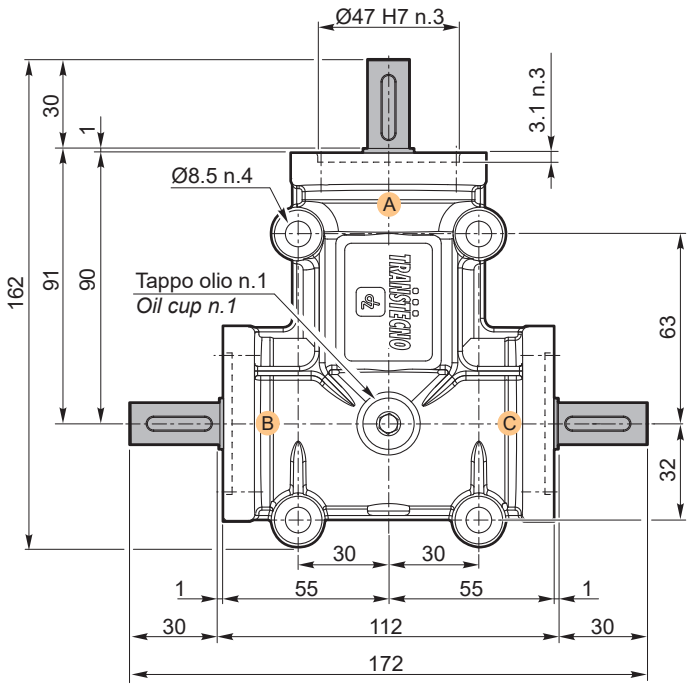

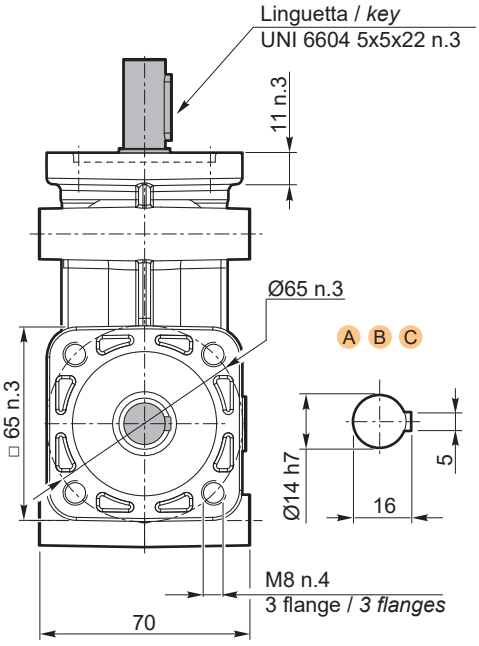

i	Code	Kg
1	ZP 21 4P ABC	2.0
2	ZP 23 4P ABC	
3	ZP 25 4P ABC	

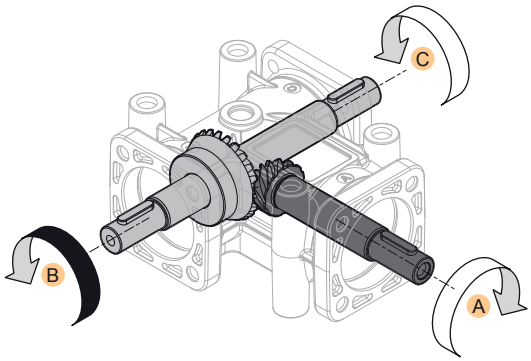

Le sedi linguetta negli alberi cavi come negli alberi maschi possono assumere qualsiasi posizione angolare.

The keyway in hollow shafts as in solid shafts can assume any angular position.

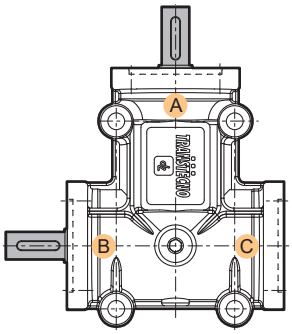

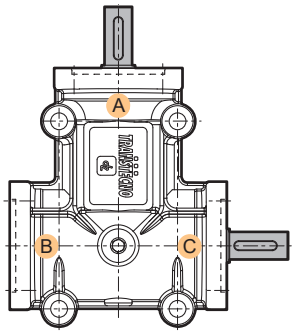

i	Code	Kg
1	ZP 20 S 4P AB	2.0
2	ZP 22 S 4P AB	
3	ZP 24 S 4P AB	

i	Code	Kg
1	ZP 20 FS 4P AC	2.0
2	ZP 22 FS 4P AC	
3	ZP 24 FS 4P AC	