Dimensioni *Dimensions*

ZP 1 ... 4P ...

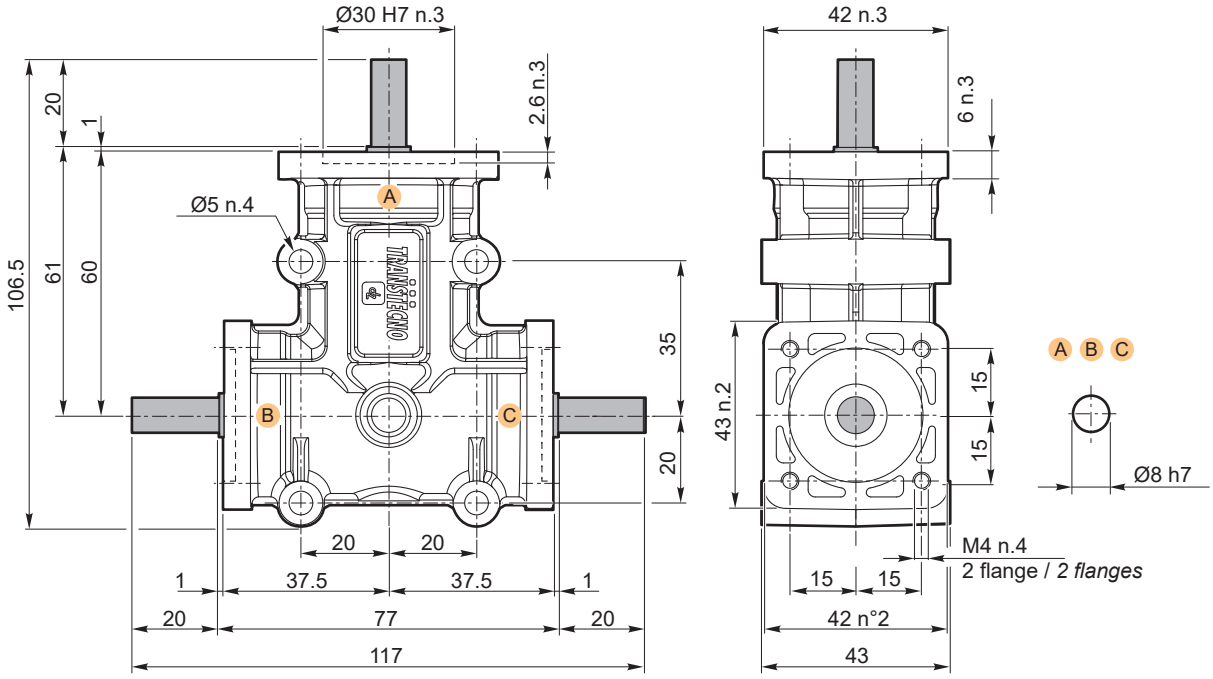

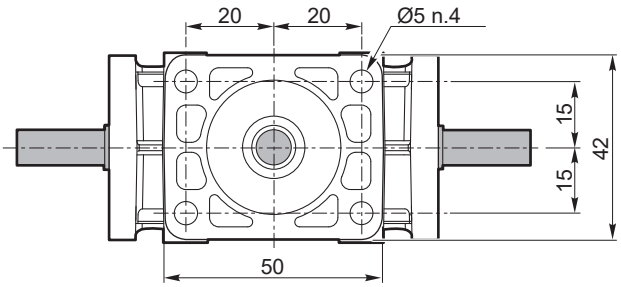

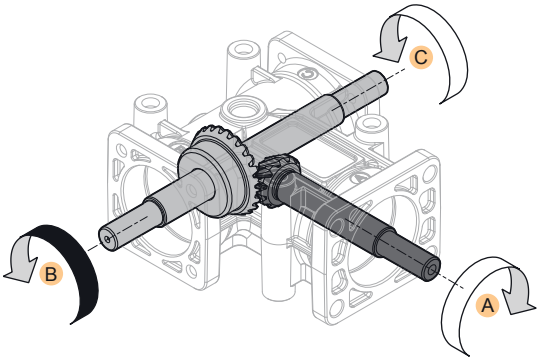

i	Code	Kg
1	ZP 11 4P ABC	0.6
2	ZP 13 4P ABC	

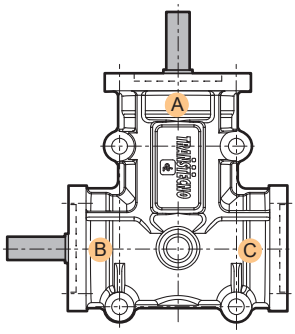

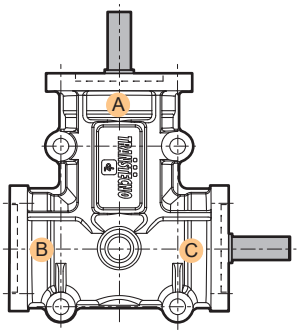

i	Code	Kg
1	ZP 10 S 4P AB	0.6
2	ZP 12 S 4P AB	

i	Code	Kg
1	ZP 10 FS 4P AC	0.6
2	ZP 12 FS 4P AC	