

Dimensioni ***Dimensions***

DZ 1... 3F ...

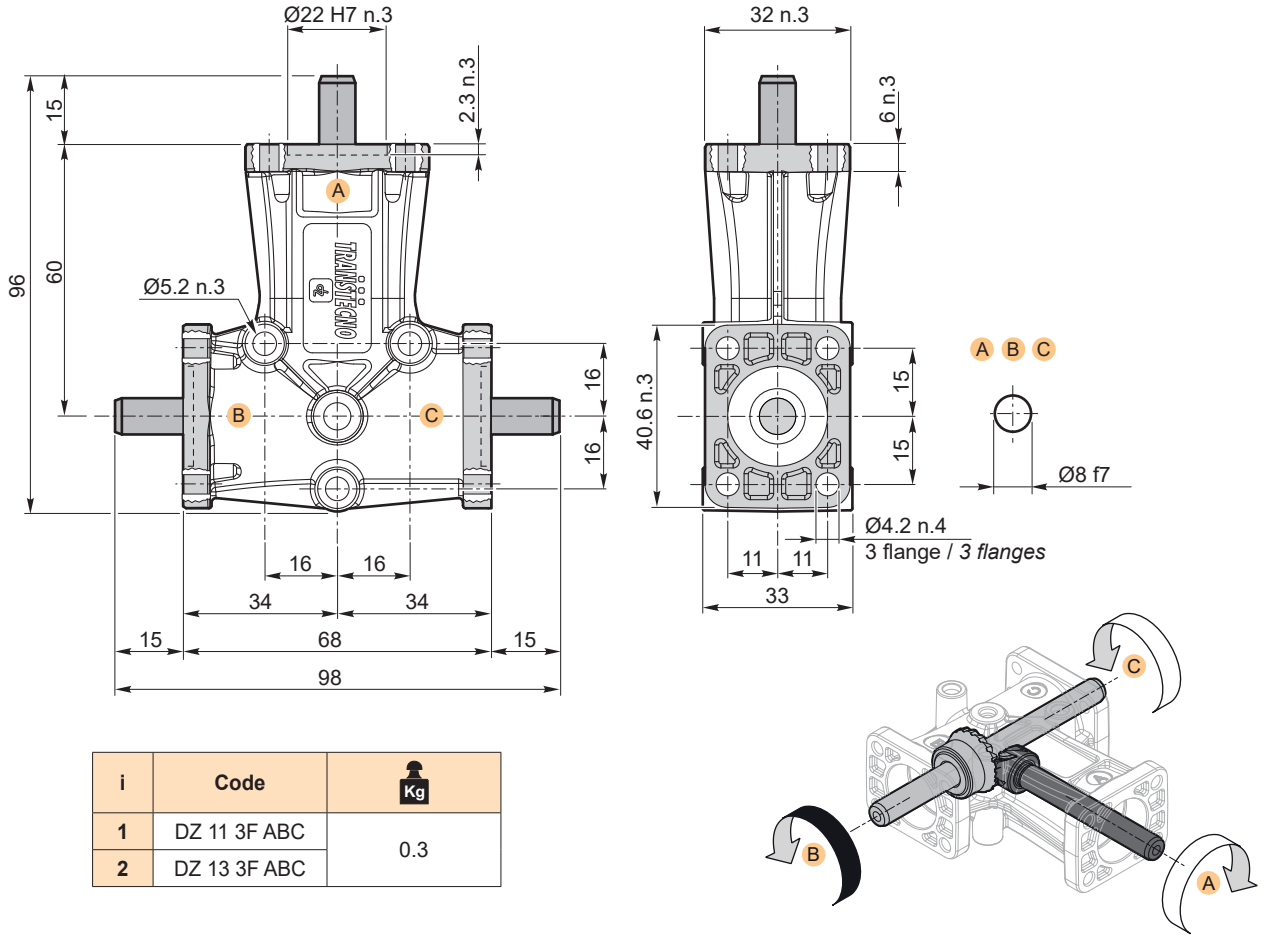

i	Code	Kg
1	DZ 11 3F ABC	0.3
2	DZ 13 3F ABC	

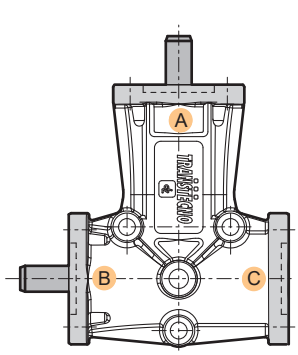

i	Code	Kg
1	DZ 10 S 3F AB	0.3
2	DZ 12 S 3F AB	

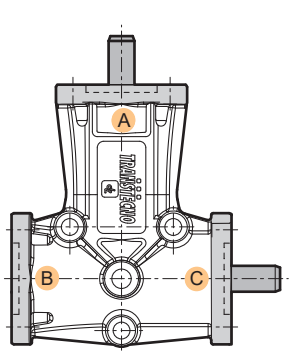

i	Code	Kg
1	DZ 10 FS 3F AC	0.3
2	DZ 12 FS 3F AC	