Dimensioni ***Dimensions***

DZ 1 ... 2F ...

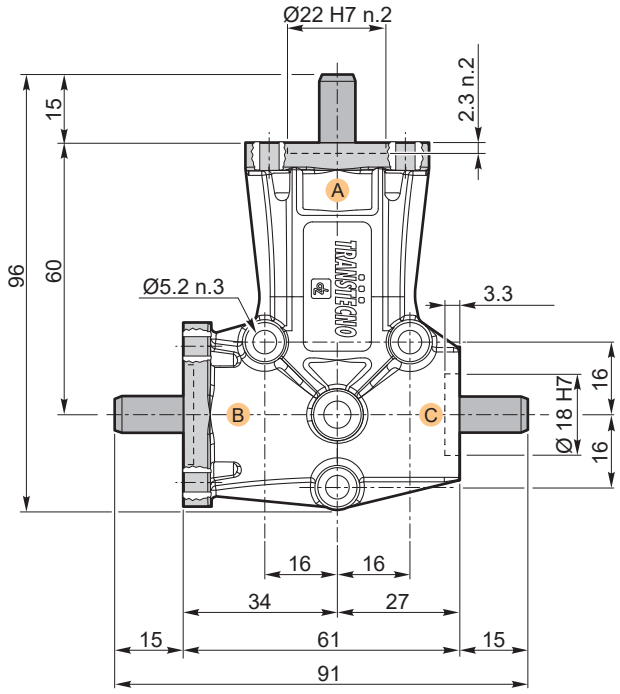

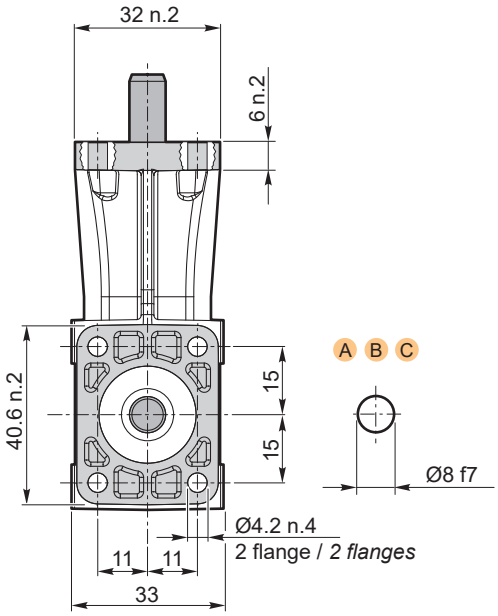

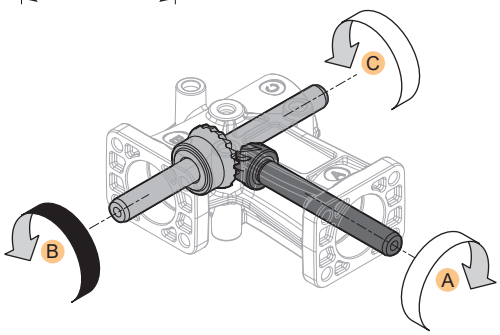

i	Code	Kg
1	DZ 11 2F ABC	0.3
2	DZ 13 2F ABC	

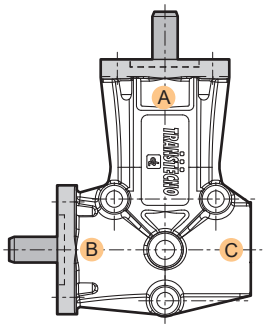

i	Code	Kg
1	DZ 10 S 2F AB	0.3
2	DZ 12 S 2F AB	

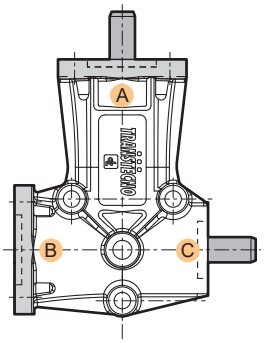

i	Code	Kg
1	DZ 10 FS 2F AC	0.3
2	DZ 12 FS 2F AC	