

Dimensioni — *Dimensions*

BBIS 504 BC...VS

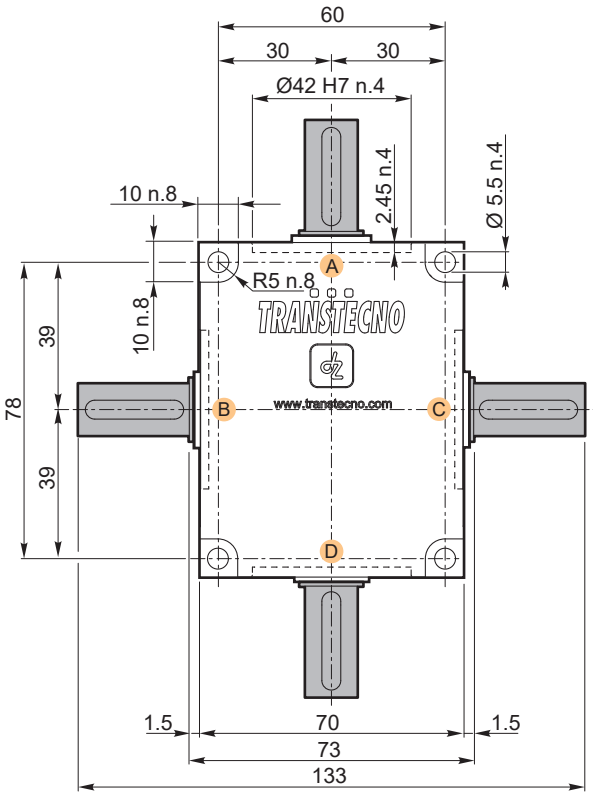

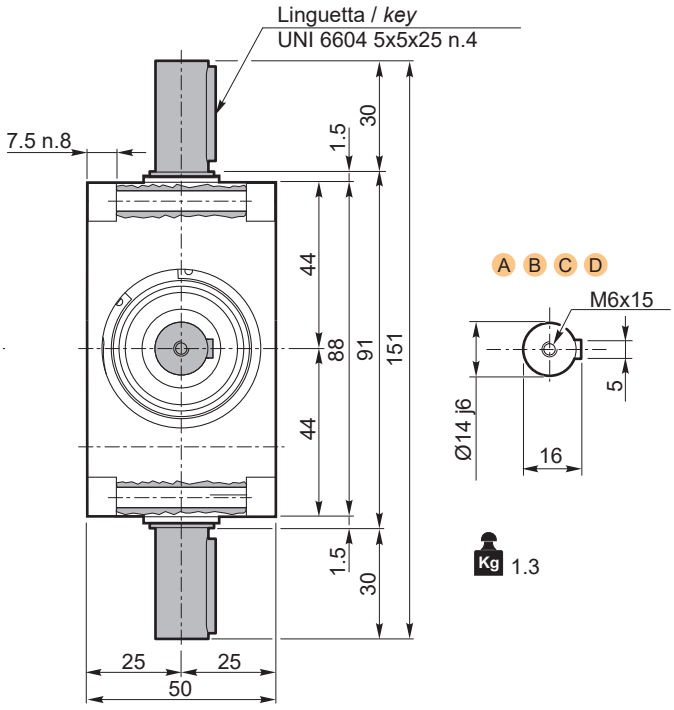

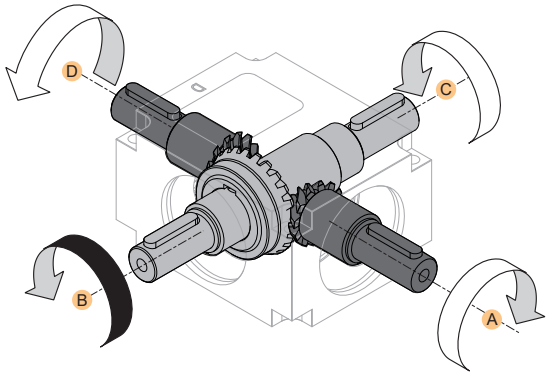

Le sedi linguetta negli alberi cavi come negli alberi maschi possono assumere qualsiasi posizione angolare.

The keyways in hollow shafts as in solid shafts can assume any angular position.

Versione — *Version*

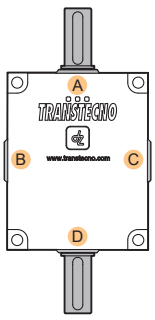

BBIS..4U..VS

i	Code
1	BBIS504U10VS TTN
1.5	BBIS504U15VS TTN
2	BBIS504U20VS TTN
3	BBIS504U30VS TTN
4	BBIS504U40VS TTN

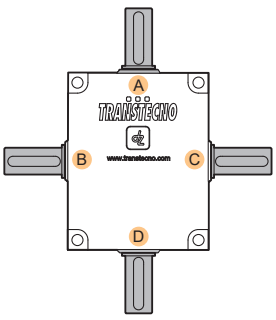

BBIS..4BC..VS

i	Code
1	BBIS504BC10VS TTN
1.5	BBIS504BC15VS TTN
2	BBIS504BC20VS TTN
3	BBIS504BC30VS TTN
4	BBIS504BC40VS TTN

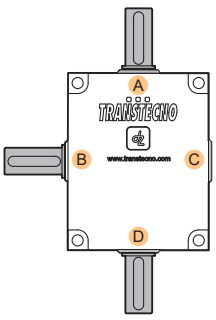

BBIS..4B..VS

i	Code
1	BBIS504B10VS TTN
1.5	BBIS504B15VS TTN
2	BBIS504B20VS TTN
3	BBIS504B30VS TTN
4	BBIS504B40VS TTN

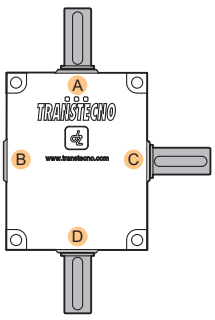

BBIS..4C..VS

i	Code
1	BBIS504C10VS TTN
1.5	BBIS504C15VS TTN
2	BBIS504C20VS TTN
3	BBIS504C30VS TTN
4	BBIS504C40VS TTN