

Dimensioni — *Dimensions*

BBIS 503 BC...

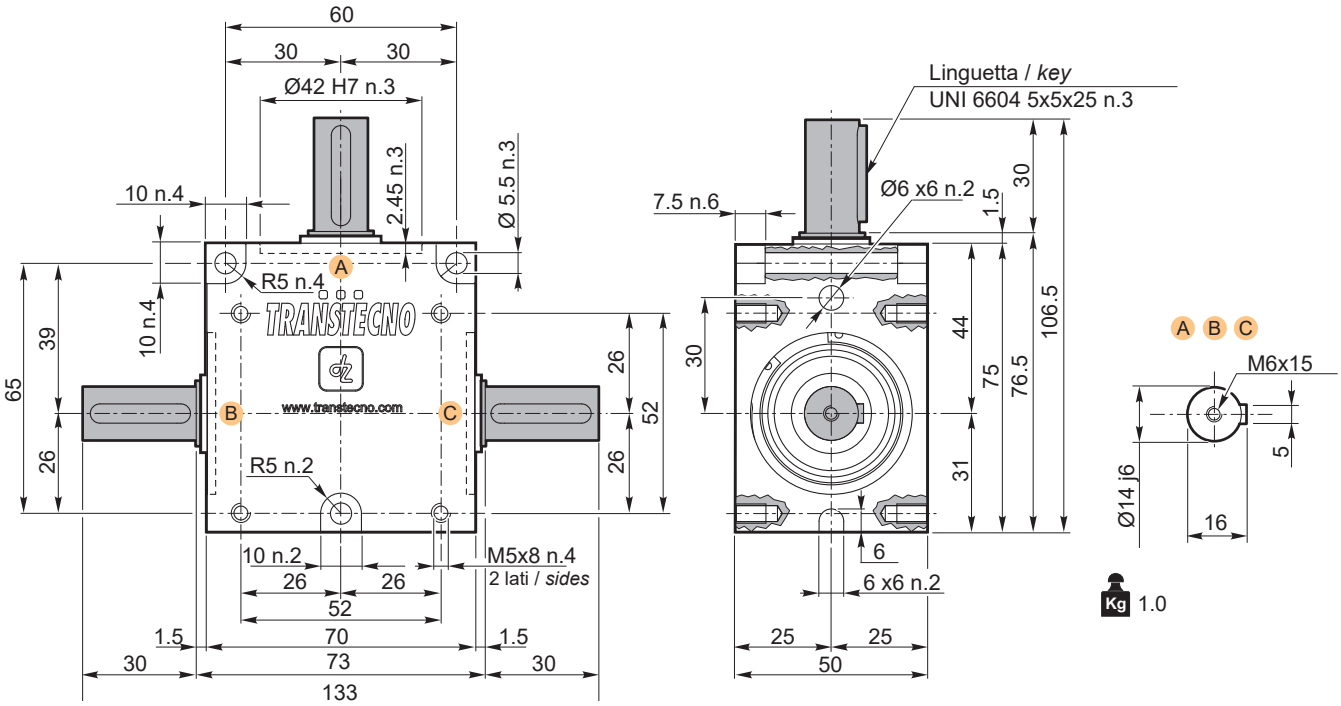

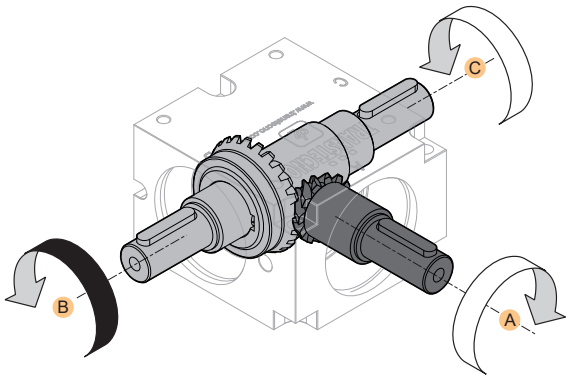

Le sedi linguetta negli alberi cavi come negli alberi maschi possono assumere qualsiasi posizione angolare.

The keyways in hollow shafts as in solid shafts can assume any angular position.

Versione — *Version*

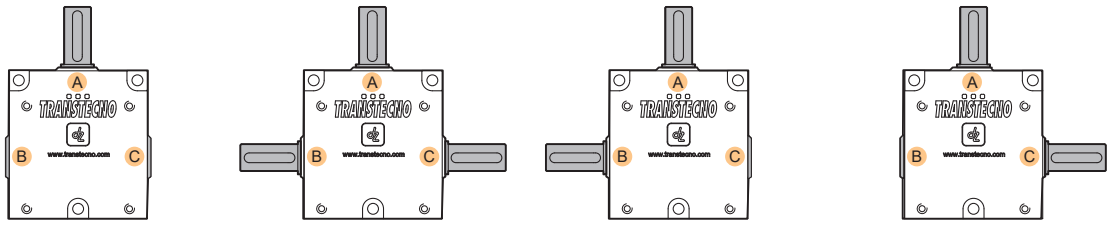

BBIS..3U.. BBIS..3BC.. BBIS..3B.. BBIS..3C..

i	Code
1	BBIS503U10 TTN
1.5	BBIS503U15 TTN
2	BBIS503U20 TTN
3	BBIS503U30 TTN
4	BBIS503U40 TTN

i	Code
1	BBIS503BC10 TTN
1.5	BBIS503BC15 TTN
2	BBIS503BC20 TTN
3	BBIS503BC30 TTN
4	BBIS503BC40 TTN

i	Code
1	BBIS503B10 TTN
1.5	BBIS503B15 TTN
2	BBIS503B20 TTN
3	BBIS503B30 TTN
4	BBIS503B40 TTN

i	Code
1	BBIS503C10 TTN
1.5	BBIS503C15 TTN
2	BBIS503C20 TTN
3	BBIS503C30 TTN
4	BBIS503C40 TTN