Dimensioni — *Dimensions*

BB 504 U...

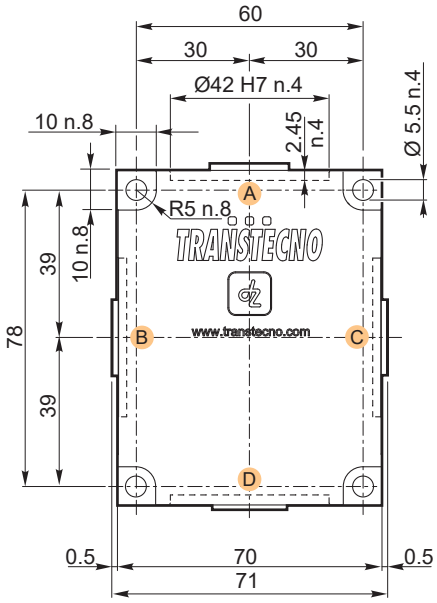

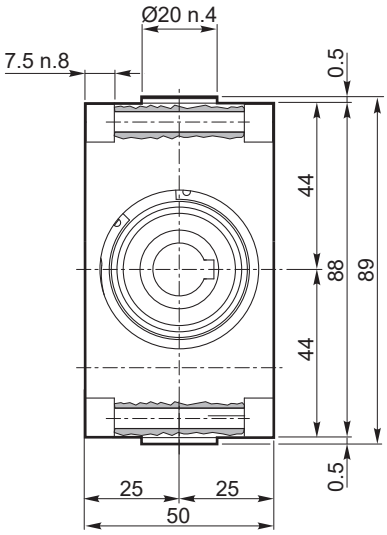

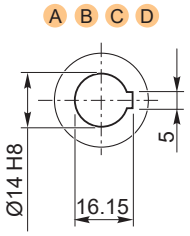

Kg 1.0

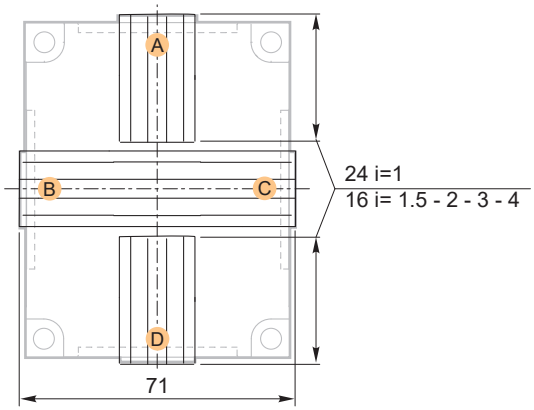

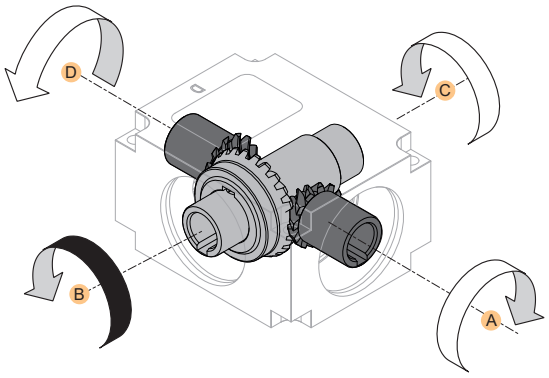

Le sedi linguetta negli alberi cavi come negli alberi maschi possono assumere qualsiasi posizione angolare.

The keyways in hollow shafts as in solid shafts can assume any angular position.

Versione — *Version*

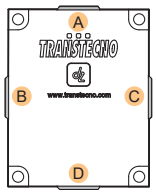

BB..4U..

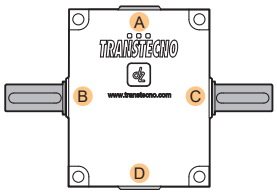

BB..4BC..

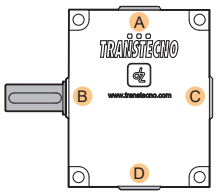

BB..4B..

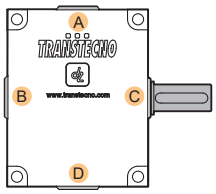

BB..4C..

i	Code
1	BB504U10 TTN
1.5	BB504U15 TTN
2	BB504U20 TTN
3	BB504U30 TTN
4	BB504U40 TTN

i	Code
1	BB504BC10 TTN
1.5	BB504BC15 TTN
2	BB504BC20 TTN
3	BB504BC30 TTN
4	BB504BC40 TTN

i	Code
1	BB504B10 TTN
1.5	BB504B15 TTN
2	BB504B20 TTN
3	BB504B30 TTN
4	BB504B40 TTN

i	Code
1	BB504C10 TTN
1.5	BB504C15 TTN
2	BB504C20 TTN
3	BB504C30 TTN
4	BB504C40 TTN