Dimensioni — *Dimensions*

BB 503 U...

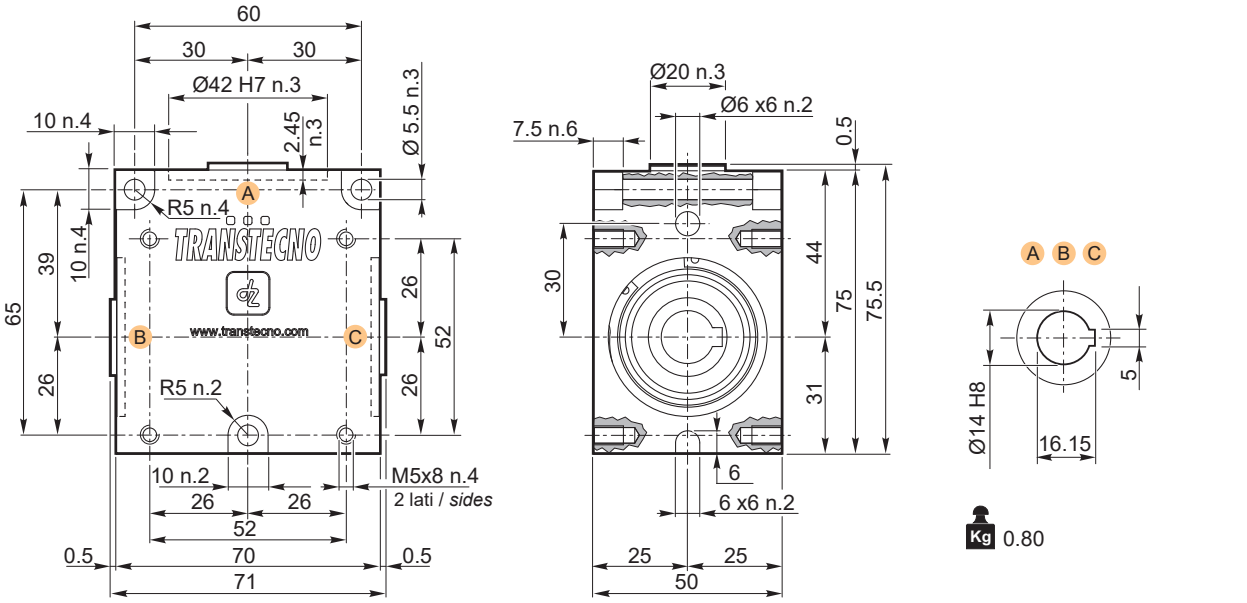

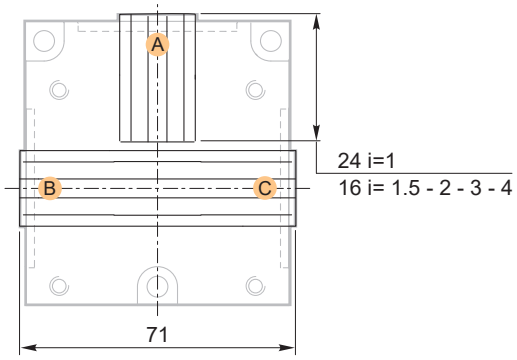

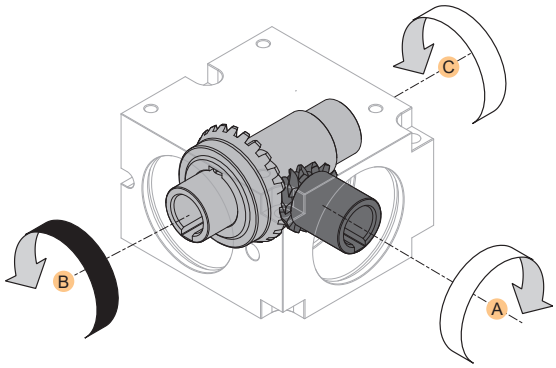

Le sedi linguetta negli alberi cavi come negli alberi maschi possono assumere qualsiasi posizione angolare.

The keyways in hollow shafts as in solid shafts can assume any angular position.

Versione — *Version*

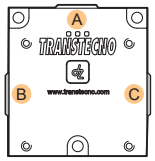

BB..3U..

i	Code
1	BB503U10 TTN
1.5	BB503U15 TTN
2	BB503U20 TTN
3	BB503U30 TTN
4	BB503U40 TTN

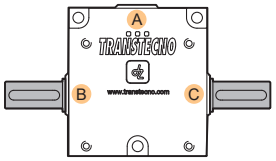

BB..3BC..

i	Code
1	BB503BC10 TTN
1.5	BB503BC15 TTN
2	BB503BC20 TTN
3	BB503BC30 TTN
4	BB503BC40 TTN

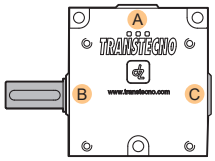

BB..3B..

i	Code
1	BB503B10 TTN
1.5	BB503B15 TTN
2	BB503B20 TTN
3	BB503B30 TTN
4	BB503B40 TTN

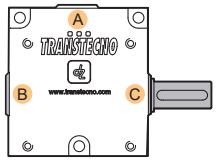

BB..3C..

i	Code
1	BB503C10 TTN
1.5	BB503C15 TTN
2	BB503C20 TTN
3	BB503C30 TTN
4	BB503C40 TTN