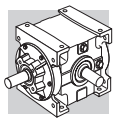

RAN 18.14

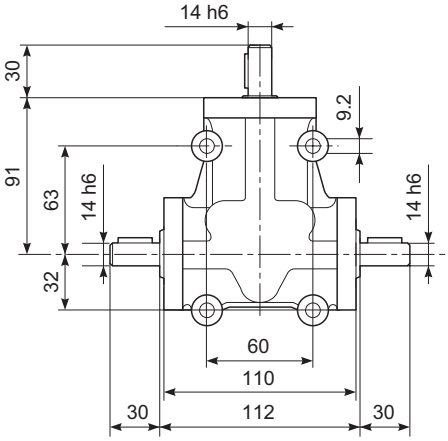

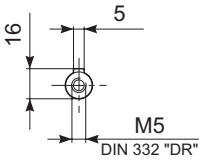

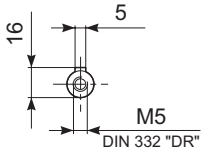

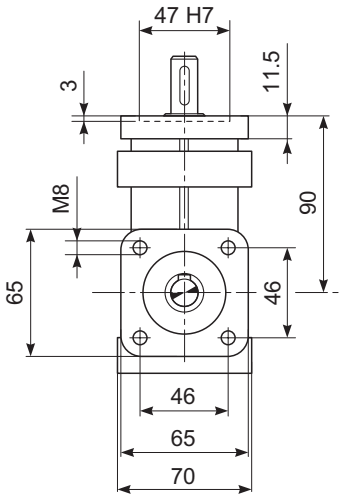

Kg	1.8

RAN 20CAVO

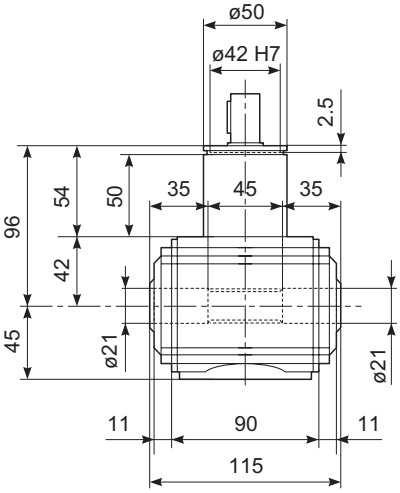

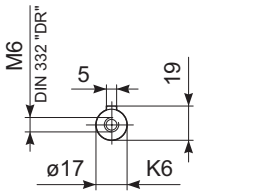

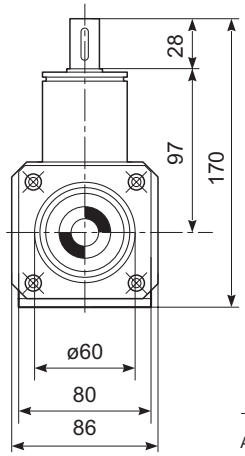

Kg	3.4